EDD

NOTES:
UNLESS OTHERWISE SPECIFIED, TOLERANCES ARE ± .010" [.254mm].

DRAWING NO.:	REV.
42-1047	C

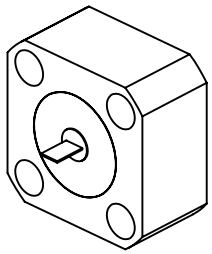

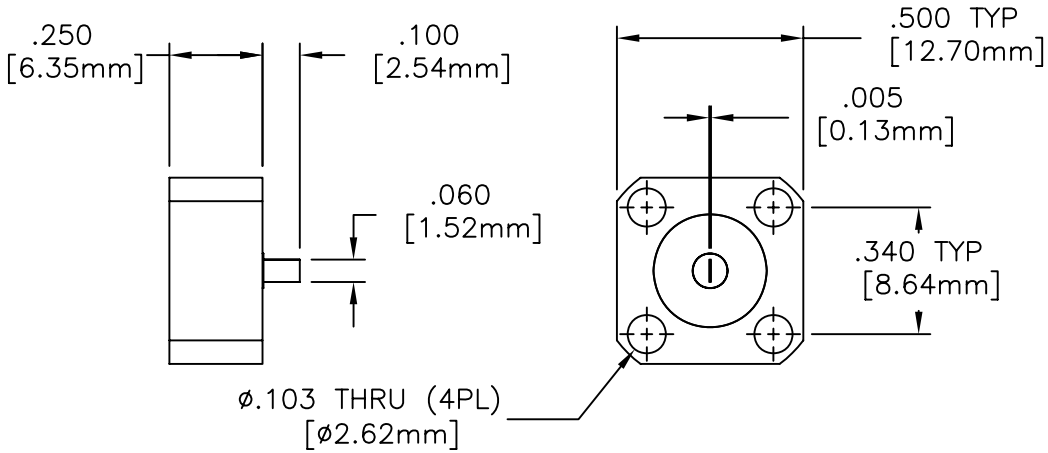

MATERIALS:
BODY: COPPER PER ASTM B301
CONTACT: BRASS PER QQ-B-626, 1/2 HD, ALLOY 360
SUBSTRATE: BERYLLIUM OXIDE
CONTACT: BERYLLIUM COPPER
RESISTIVE FILM: NICHROME

FINISH:
BODY: NICKEL PER QQ-N-290A
CONTACT: GOLD PER MIL-G-45204B

TECHNICAL: (TERMINATION)
NOMINAL IMPEDANCE (OHMS): 50
FREQUENCY RANGE (GHz): DC - 18
VSWR (MAX): 1.35:1
AVERAGE POWER (WATTS): 30
DC RESISTANCE: 50.0 OHMS ± 5%
TEMPERATURE COEFFICIENT: ± 200 PPM MAX
OPERATING TEMPERATURE (°C): -55° TO +150°

REV.	DESCRIPTION	DRAWN	APVD.
C	08-F0805	OJC 08/29/08	
B	ECN#02110	ALM 10/23/03	
A	RLSE#01815	PSC 07/95	MTG 07/95

RLSE# 01815 | APVD MTG | DATE 07/95

UNLESS OTHERWISE SPECIFIED
1. DO NOT SCALE DRAWING
2. DIMENSIONS ARE IN INCHES
3. DIMENSIONS ARE AFTER PLATING
4. CORNERS, EDGES AND FILLETS: R MAX
5. SURFACE ROUGHNESS:
6. REMOVE ALL BURRS

TOLERANCES
.X ±
.XX ±
.XXX ±
ANGLES X° ±

THE INFORMATION CONTAINED HEREIN IS: (A) CONSIDERED PROPRIETARY TO FLORIDA RF LABS INC.; (B) PROTECTED BY COPYRIGHT OWNED BY FLORIDA RF LABS INC.; (C) CONSIDERED A "WORK FOR HIRE" UNDER COPYRIGHT LAW; (D) PROTECTED BY TRADE SECRET LAWS WHICH MAKE ILLEGAL THE MISAPPROPRIATION OF THIS INFORMATION; AND (E) IS TO BE USED SOLELY FOR THE PURPOSE WHICH IT IS SUPPLIED. THIS INFORMATION SHALL NOT BE DISCLOSED IN WHOLE OR IN PART, TO ANY PARTY, FOR ANY REASON WITHOUT THE EXPRESS WRITTEN CONSENT OF A QUALIFIED EXECUTIVE OF FLORIDA RF LABS INC.

REFERENCE: CATALOG

MATERIAL: –

FINISH: –

FLORIDA RF Labs INC.
8851 OLD KANSAS AVE.
STUART, FL. 34997
772-286-9300

TITLE: TERMINATION, STRIPLINE FLANGE, 30 WATT

SCALE	CAGE CODE ID NO.	SIZE	DRAWING NO.:	REV.
2/1	2Y194	A	42-1047	C

MFG: | CHKD.: NAK 10/09/97 | DRAWN: PSC 07/14/95 | SHEET OF