EDD

DRAWING NO.:	REV.
22-0012	D

NOTES:
UNLESS OTHERWISE SPECIFIED, TOLERANCES ARE ± .010" [.254mm].
MARKING: (COLOR CODE) SMALL RED DOT LOCATED ON TOP
OR SIDE OF UNIT APPROX. WHERE SHOWN

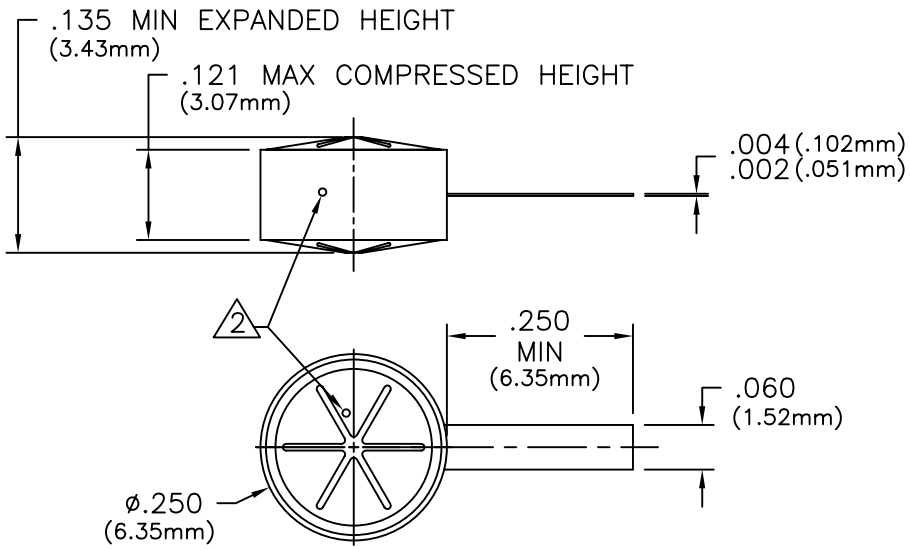

MATERIALS:
BODY: BRASS
TAB: BERYLLIUM COPPER

FINISH:
BODY: GOLD PER MIL–G–45204
TAB: TIN PER MIL–T–10727

TECHNICAL: (TERMINATION)
NOMINAL IMPEDANCE (OHMS): 50
FREQUENCY RANGE (GHz): DC–18.0
TEMPERATURE COEFFICIENT: ± 200 PPM MAX
OPERATING TEMPERATURE (°C): –55° TO +150°
VSWR (MAX): 1.50
AVERAGE POWER (WATTS): 3
DC RESISTANCE: 50 OHMS ± 5%

REV.	DESCRIPTION	DRAWN	APVD.
D	08–F0754	OJC 08/18/08	
C	ECN#01730	ALM 11/06/02	
B	ECN# N/A	– –	– –
A	ECN# N/A	– –	– –

ECN#	APVD	DATE
02247	MJK	09/97

UNLESS OTHERWISE SPECIFIED
1. DO NOT SCALE DRAWING
2. DIMENSIONS ARE IN INCHES
3. DIMENSIONS ARE AFTER PLATING
4. CORNERS, EDGES AND FILLETS: R MAX
5. SURFACE ROUGHNESS:
6. REMOVE ALL BURRS

TOLERANCES
.X ±
.XX ±
.XXX ±
ANGLES X° ±

THE INFORMATION CONTAINED HEREIN IS: (A) CONSIDERED PROPRIETARY TO FLORIDA RF LABS INC.; (B) PROTECTED BY COPYRIGHT OWNED BY FLORIDA RF LABS INC.; (C) CONSIDERED A "WORK FOR HIRE" UNDER COPYRIGHT LAW; (D) PROTECTED BY TRADE SECRET LAWS WHICH MAKE ILLEGAL THE MISAPPROPRIATION OF THIS INFORMATION; AND (E) IS TO BE USED SOLELY FOR THE PURPOSE WHICH IT IS SUPPLIED. THIS INFORMATION SHALL NOT BE DISCLOSED IN WHOLE OR IN PART, TO ANY PARTY, FOR ANY REASON WITHOUT THE EXPRESS WRITTEN CONSENT OF A QUALIFIED EXECUTIVE OF FLORIDA RF LABS INC.

REFERENCE –

MATERIAL –

FINISH –

FLORIDA RF Labs INC.
8851 OLD KANSAS AVE.
STUART, FL. 34997
772–286–9300

TITLE TERMINATION, PILL LOAD 3 WATT RESILIENT

SCALE	CAGE CODE ID NO.	SIZE	DRAWING NO.:	REV.
4/1	2Y194	A	22-0012	D

MFG:	CHKD.:	DRAWN:	SHEET OF
MJK 09/30/97	NAK 09/30/97	GEC 09/29/99	